Discrete single-rail regulated power supply with MOSFET output

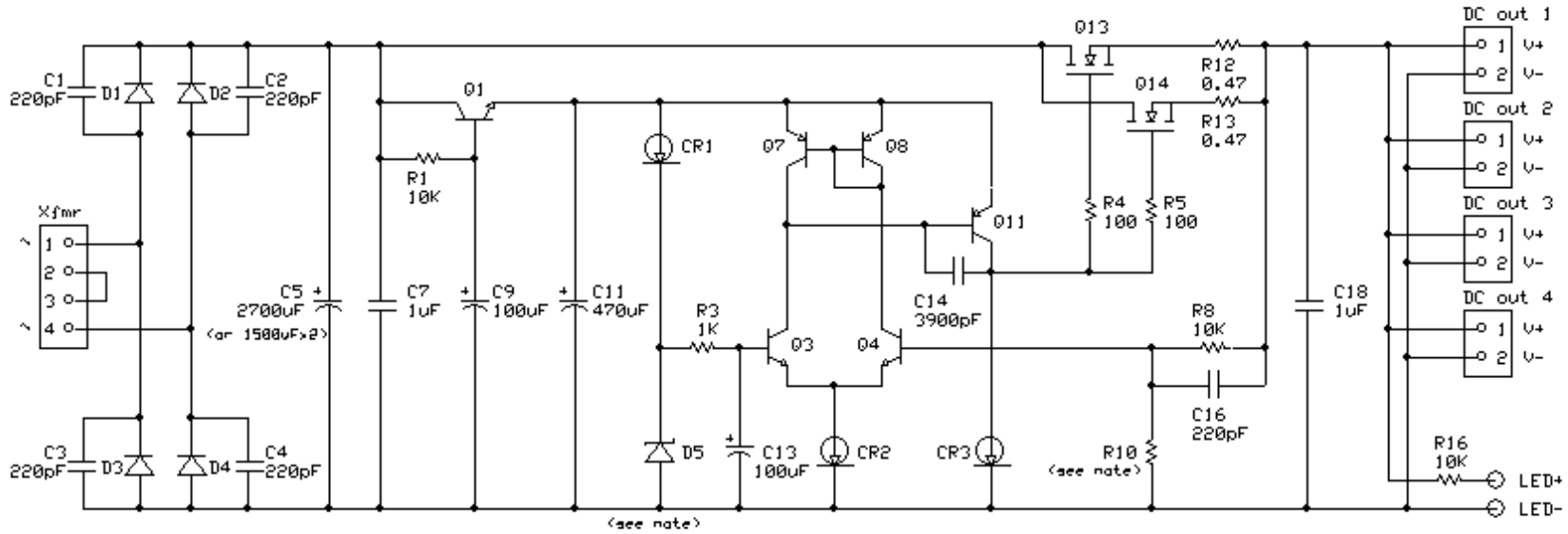

Notes:

- Resistors R12-R13: 2W 5% metal film or metal oxide type
- All other resistors: 1/8W 1% metal film type
- Resistor R10: 6.81K for 30V output, 10K for 24V and 15V
- All capacitors are rated 63V or higher unless otherwise noted
- Diodes D1-D4: MUR820 or similar
- Zener diode D5: BZX55C12 for 30V or 24V output, BZX55C7V5 for 15V
- Current regulating diode CR1, CR2: CR240, J508, 1N5307 or E-202
- Current regulating diode CR3: CR470, J511, 1N5314 or E-562
- All NPN BJTs: BC546B; all PNP BJTs: BC556B
- All MOSFETs: IRLZ24N
- MOSFETs must be mounted on heatsink
- Power transformer secondary voltage (at full load):
  + 15V+15V or 30V for 30V output
  + 12V+12V or 24V for 24V output
  + 9V+9V or 18V for 15V output
  + VA rating should be selected according to target load

AMB Labs		
sigmall Regulated PSU		
Copyright (C) 2007 Ti Kan	Rev 1.0a 02/22/2007	PSU PCB