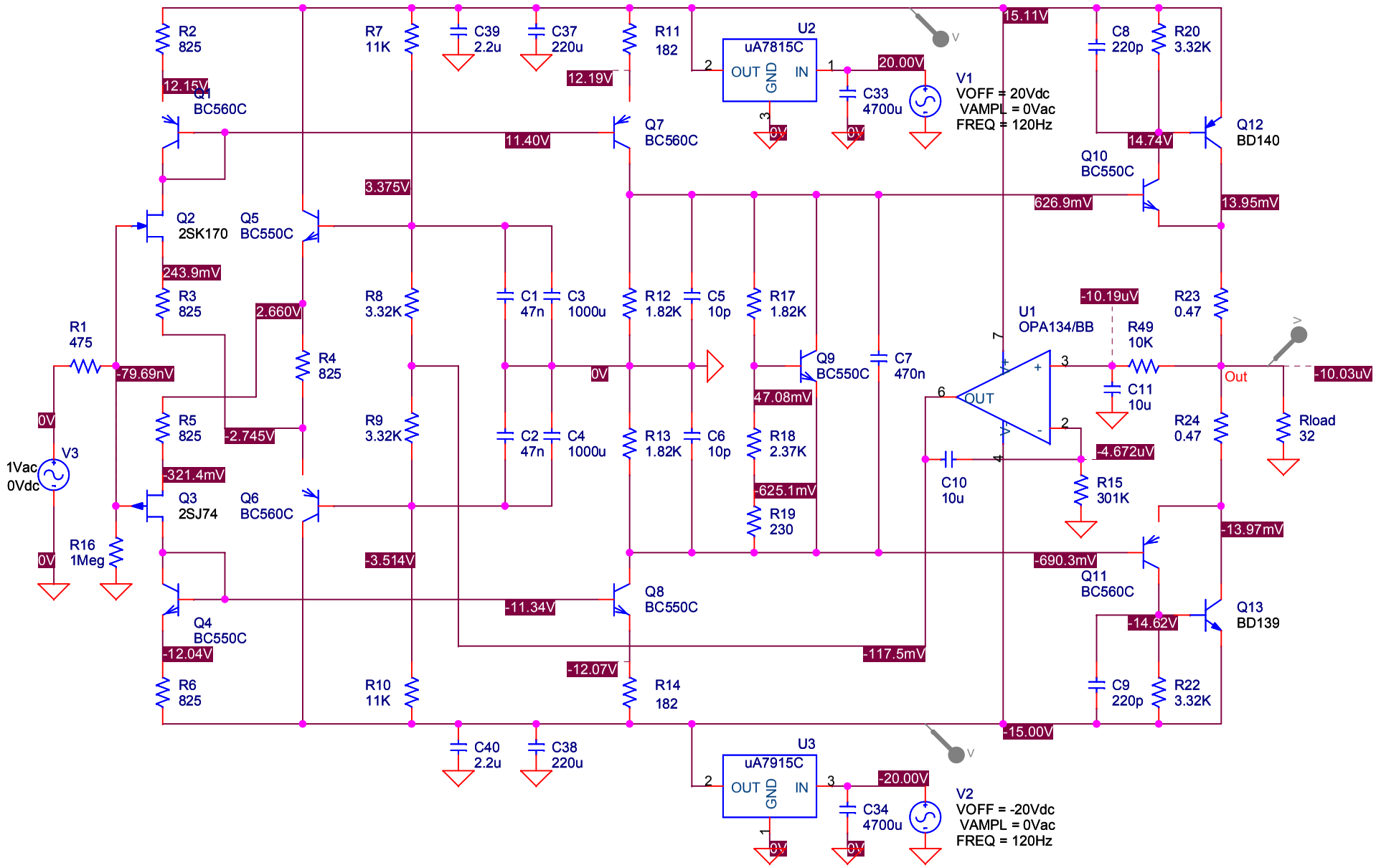

Cavalli-Kan Kumisa III Headphone Amplifier

Operating Points

2007 Ti Kan http://www.amb.org/audio/ck2/

Note: Left channel shown only. Rectifiers D1-D8 not shown. U1 shown is OPA134, actual opamp is OPA2134 (different pinout).