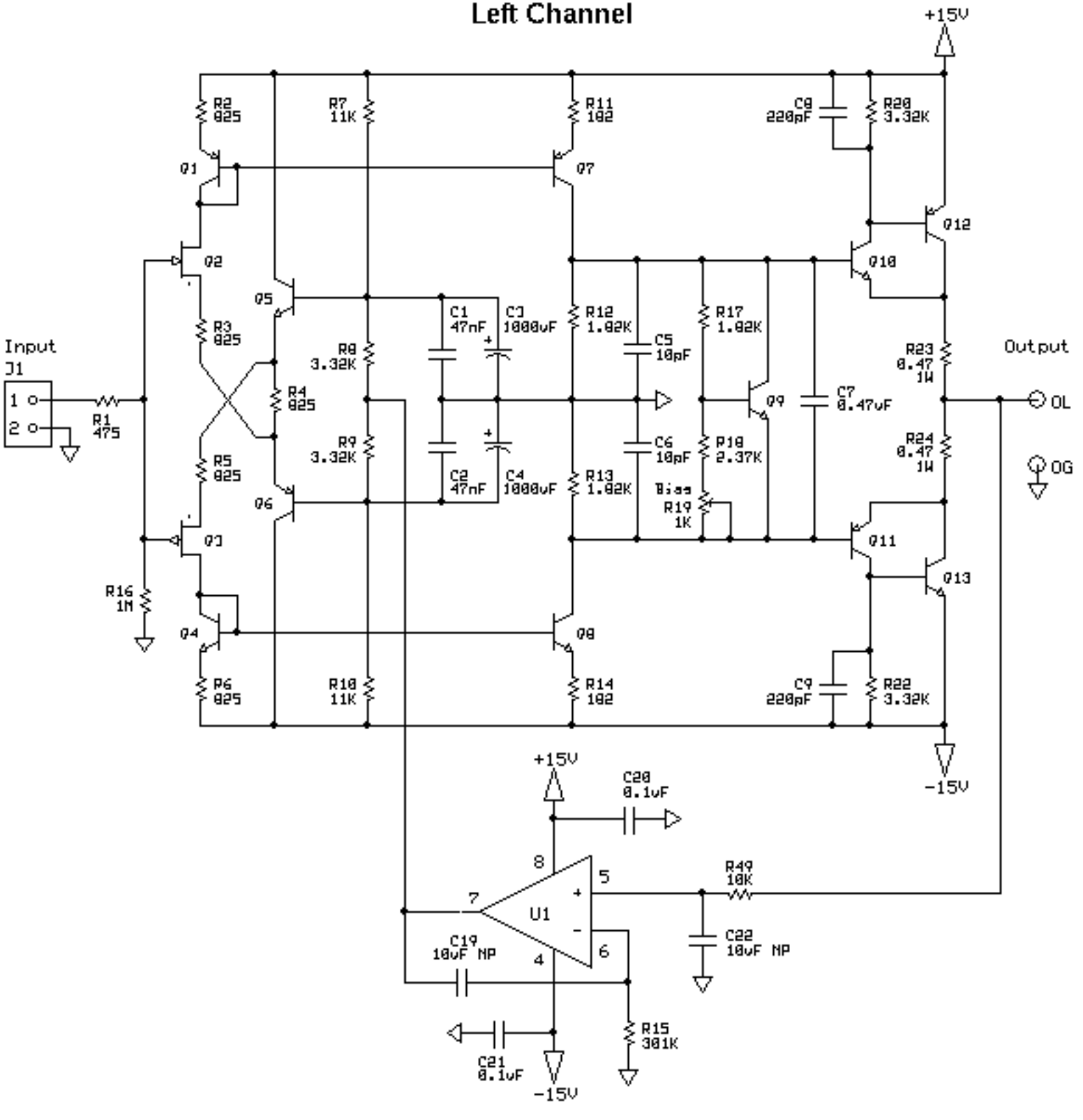Cavalli-Kan Kumisa III Headphone Amplifier
Left Channel